Automating VNF Management (ECOMP)

White paper available @ att.com/ecomp

1

Enhanced Control, Orchestration, Management & Policy

David Kinsey, Lead-Principal Technical Architect, AT&T

For Presentation at IEEE CQR Workshop May 9-12, 2016

Disclosure

This document presents information about the current plans and considerations for AT&T's ECOMP System. This information is subject to change without notice to you. Neither the furnishing of this document to you nor any information contained in this document is or should be interpreted by you as a legal representation, express or implied warranty, agreement, or commitment by AT&T concerning (1) any information or subjects contained in or referenced by this document, or (2) the furnishing of any products or services by AT&T to you, or (3) the purchase of any products or services by AT&T from you, or (4) any other topic or subject. AT&T owns intellectual property relating to the information presented in this document. Notwithstanding anything in this document to the contrary, no rights or licenses in or to this or any other AT&T intellectual property are granted, either expressly or impliedly, either by this document or the furnishing of this document to you or anyone else. Rights to AT&T intellectual property may be obtained only by express written agreement with AT&T, signed by AT&T's Chief Technology Officer (CTO) or the CTO's authorized designate.

NFV/SDN

- Although SDN provides automated management of Layer 1-3 networks it is insufficient for networks based on layers 4-7 such as IMS and mobility networks (LTE, 5G)
- NFVs are used to create Application Servers and other IMS components
- NFVs are also used to create mobility network elements which behave as a layer 7 application providing a network role.
- A single NFV can be decomposed into several virtual functions, these may be composed of many virtual function components, all of these deployed in a variety of elastic configurations across many virtual machines.
- SDN Control models do not provide for a more complex ecosystem where interfaces are defined higher layers (4-7) of the communications stack.

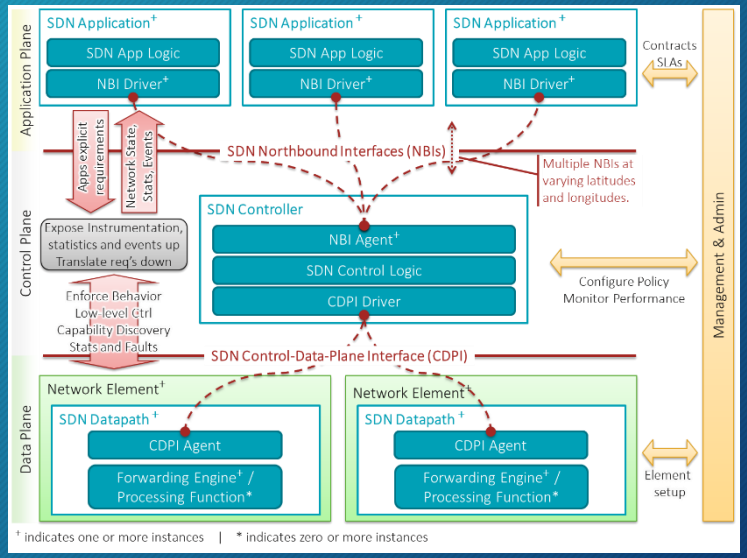

Framework for Automated NFV/SDN Management

- With the removal of specialty hardware which was optimized for the application more instances of the software will be required in order to provide the same capacity.
- These elements are cheaper using the commodity hardware and reusing the software.
- Use of standardized Hardware and component based software increases the need for standardization.
- However, this increases not decreases the operations demands for management and configuration of the network to provide a stable platform for network communications
- Therefore there is a pressing demand for automated management of the NFV environment.
- Interface standardization and ETSI Mano model is not a silver bullet, these are merely stepping stones to a broader more comprehensive model.

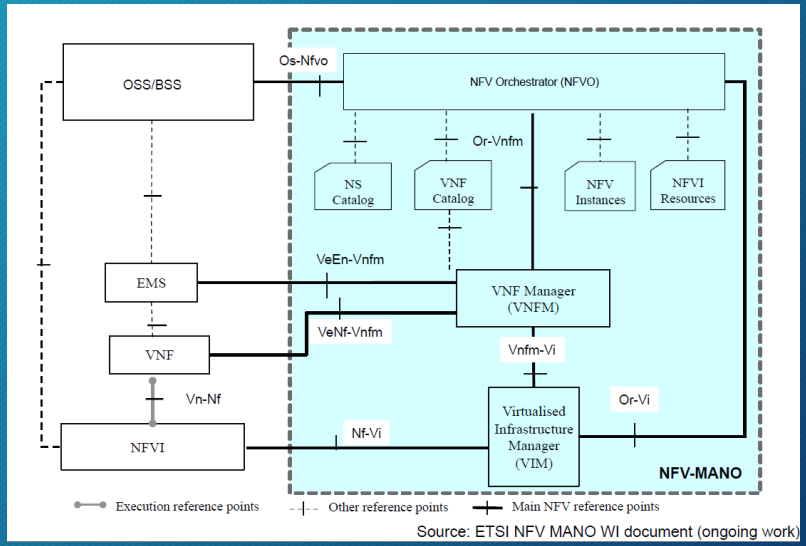

Source: ETSI NFV MANO WI document (ongoing work)

ETSI – NFV MANO and ECOMP Alignment

ETSI MANO

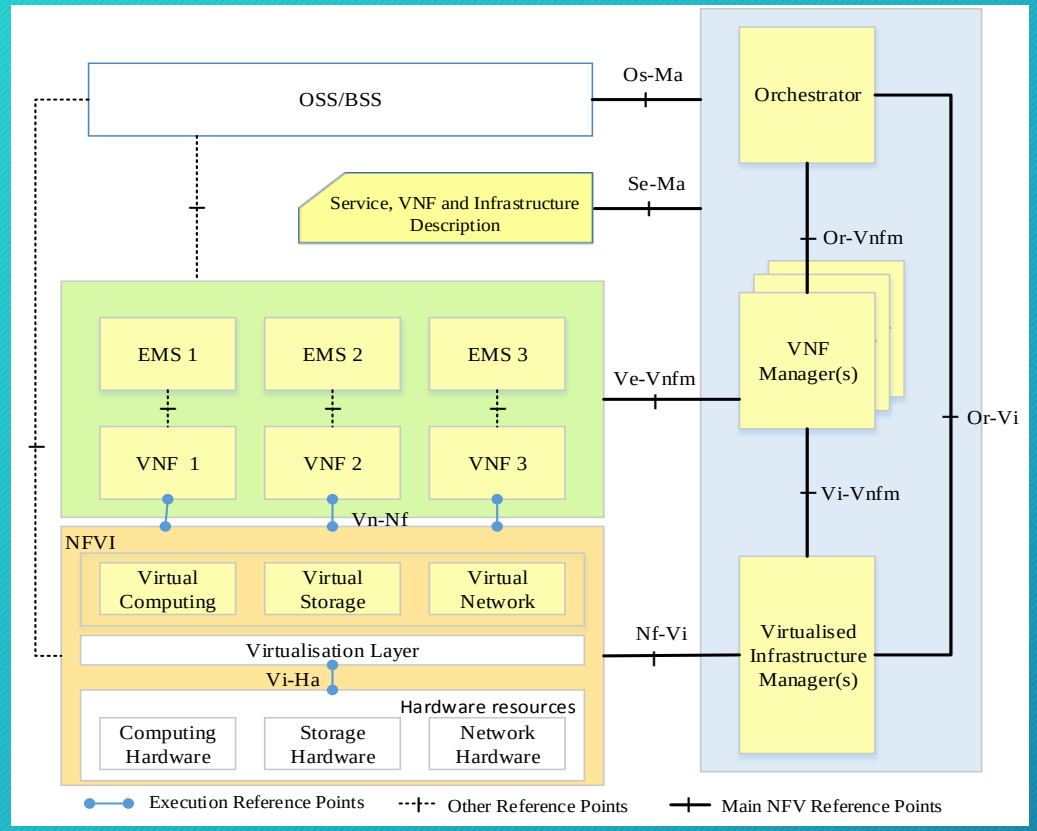

AT&T ECOMP

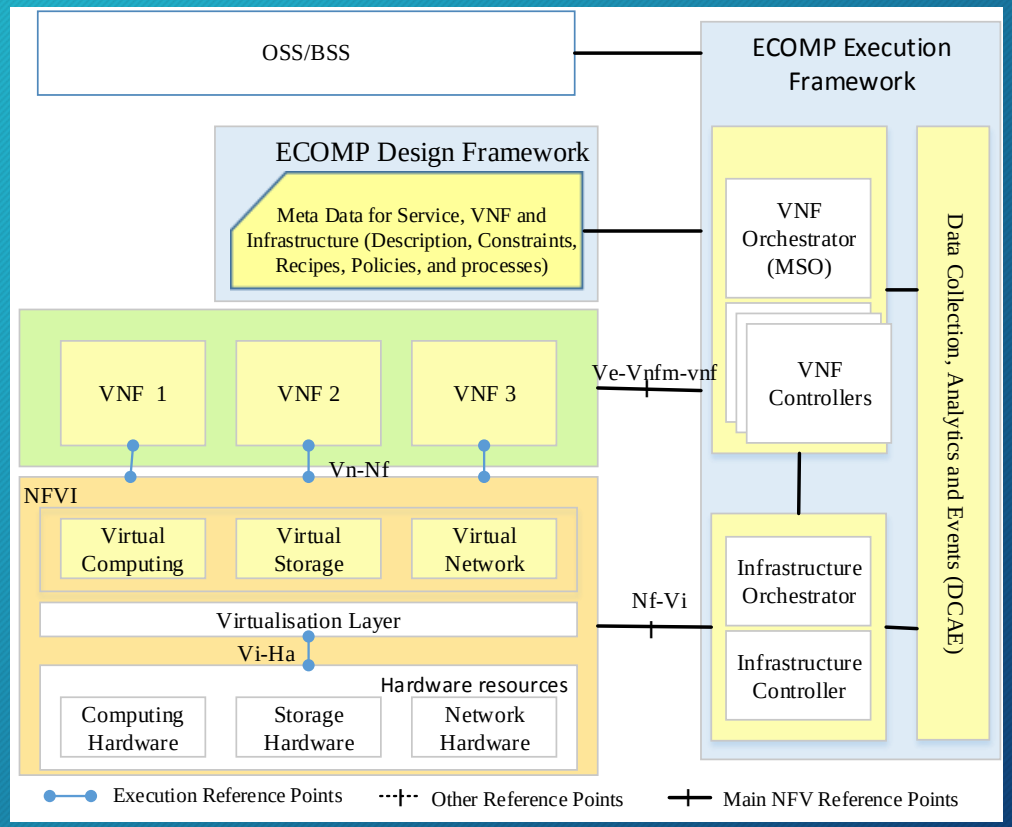

ECOMP Platform

Design Time Framework

- Collaborative, catalog-driven "self-service" design studio
  - Define resources, services and products
  - Create and manage models, processes, policies and analytics for creation and lifecycle management
- Systematic evaluation, certification and onboarding of technology supply chain
- Institutionalize content & models for consistent implementation & technology insertion
- Single platform to define and deploy instantiation, management and control definitions and behaviors

Deploy

Execution Time Framework

- Autonomic framework that manages the full lifecycle of D2 infrastructure, networks and services
  - Uses definitions/models provided by design modules
  - Orchestrate delivery & augmentation
  - Monitor & manage via analytics guided by SLAs & policies
- Control capabilities to execute configuration, real-time policies and control the state of distributed network components and services
- Instantiate, configure and manage the lifecycle of resources, topology and service implementations

Learn

The ECOMP (Enhanced Control, Orchestration, Management & Policy) platform is the part of the larger D2 ecosystem that is responsible for the efficient control, operation and management of D2 capabilities and functions. It specifies standardized abstractions and interfaces that enable efficient interoperation of the D2 ecosystem components.

ECOMP Platform Components

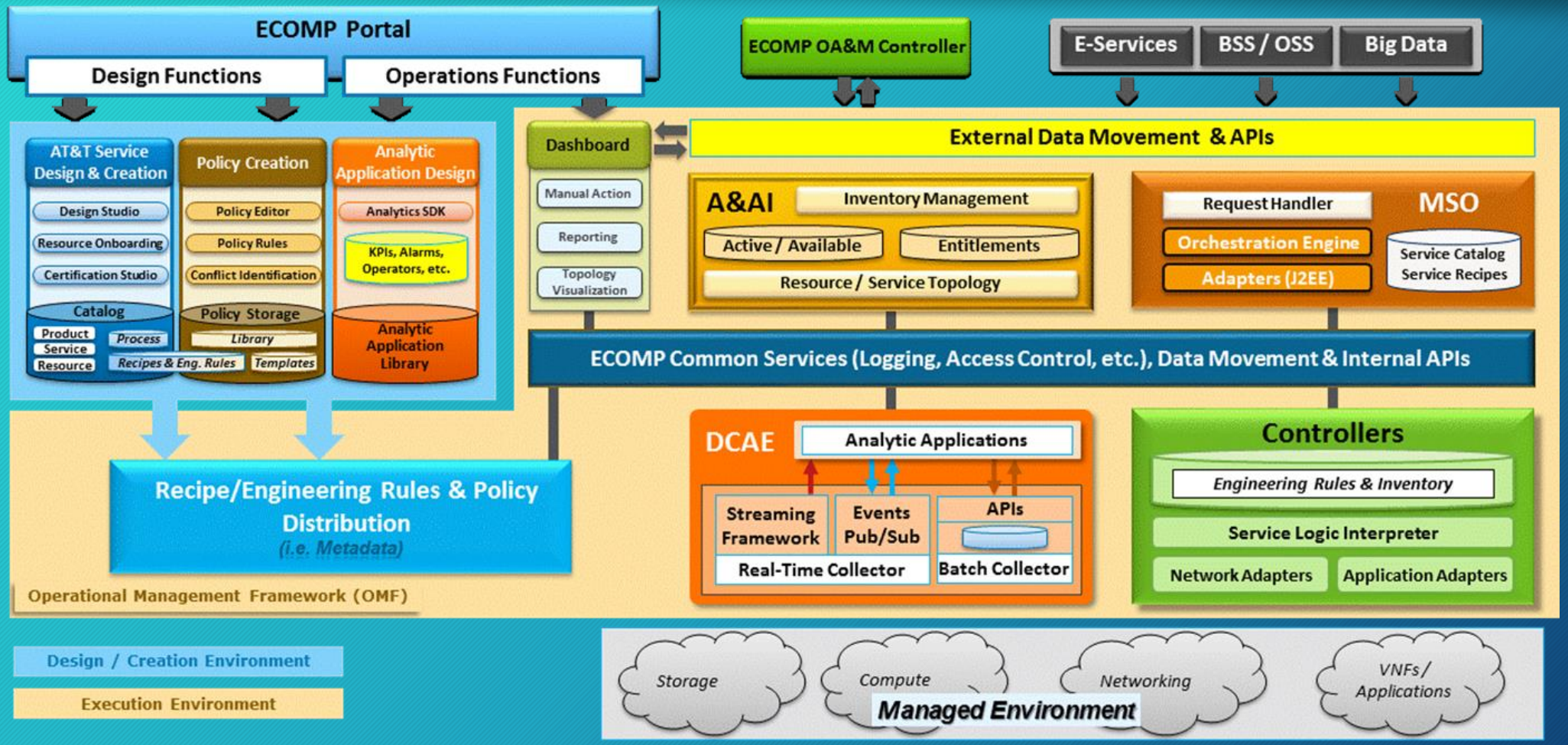

Meta-Data Driven

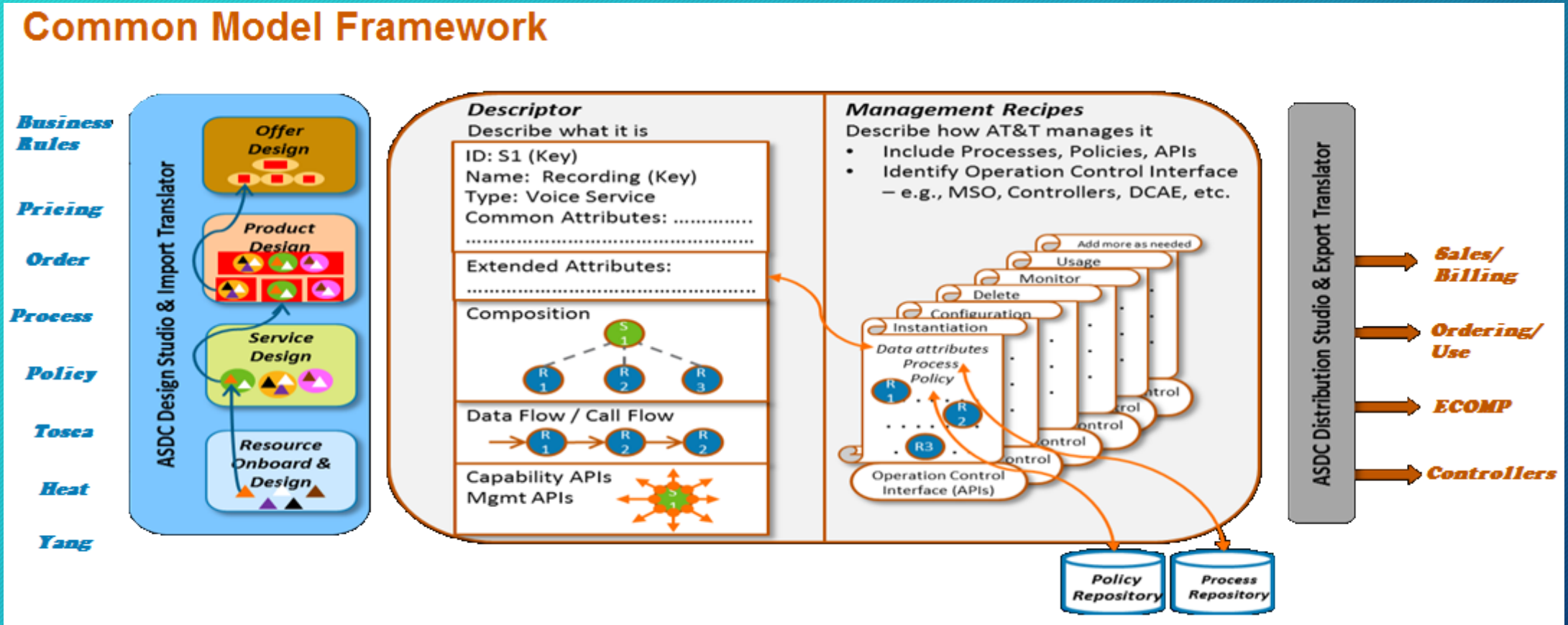

Design Environment

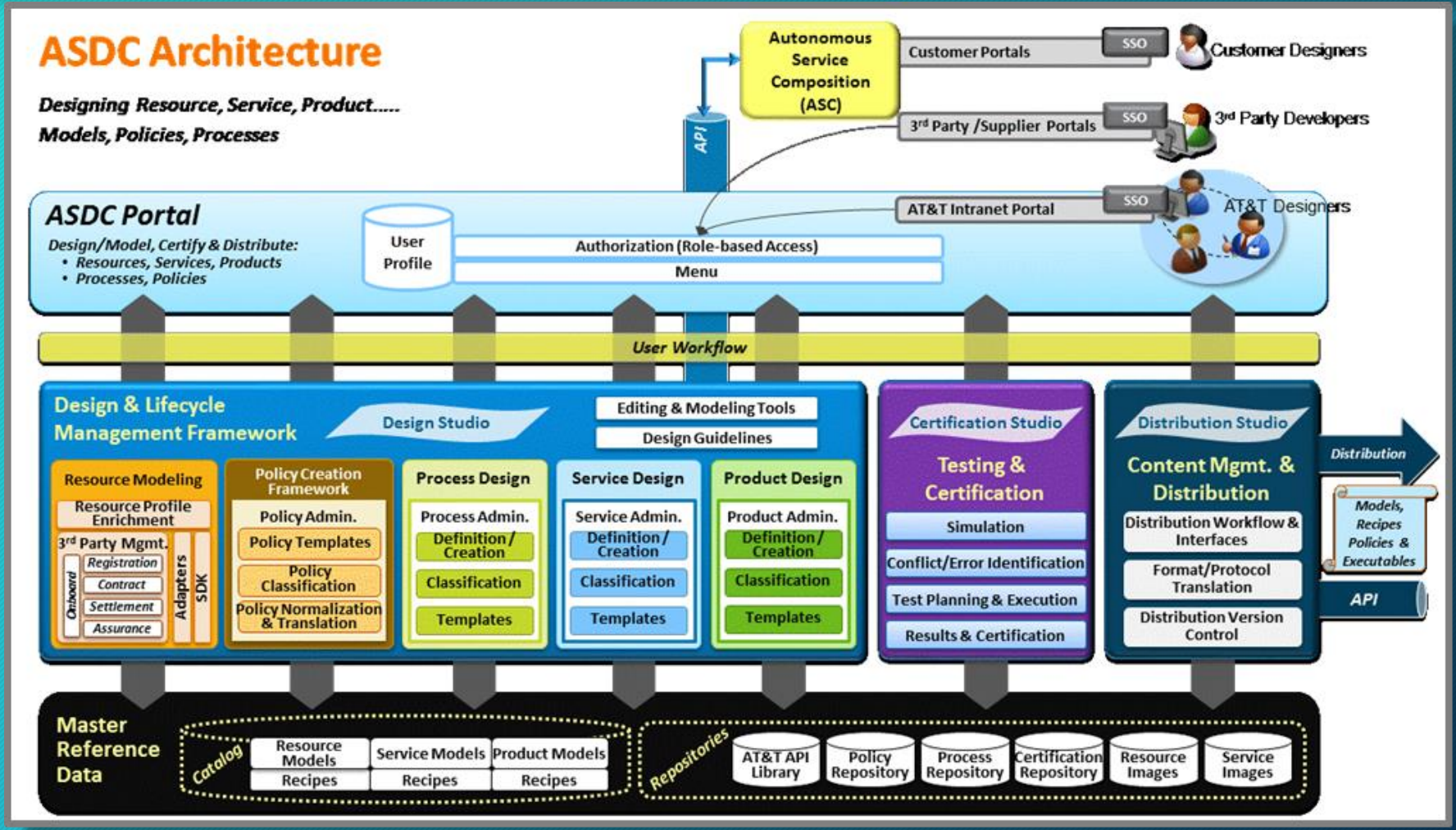

Lifecycle Automation

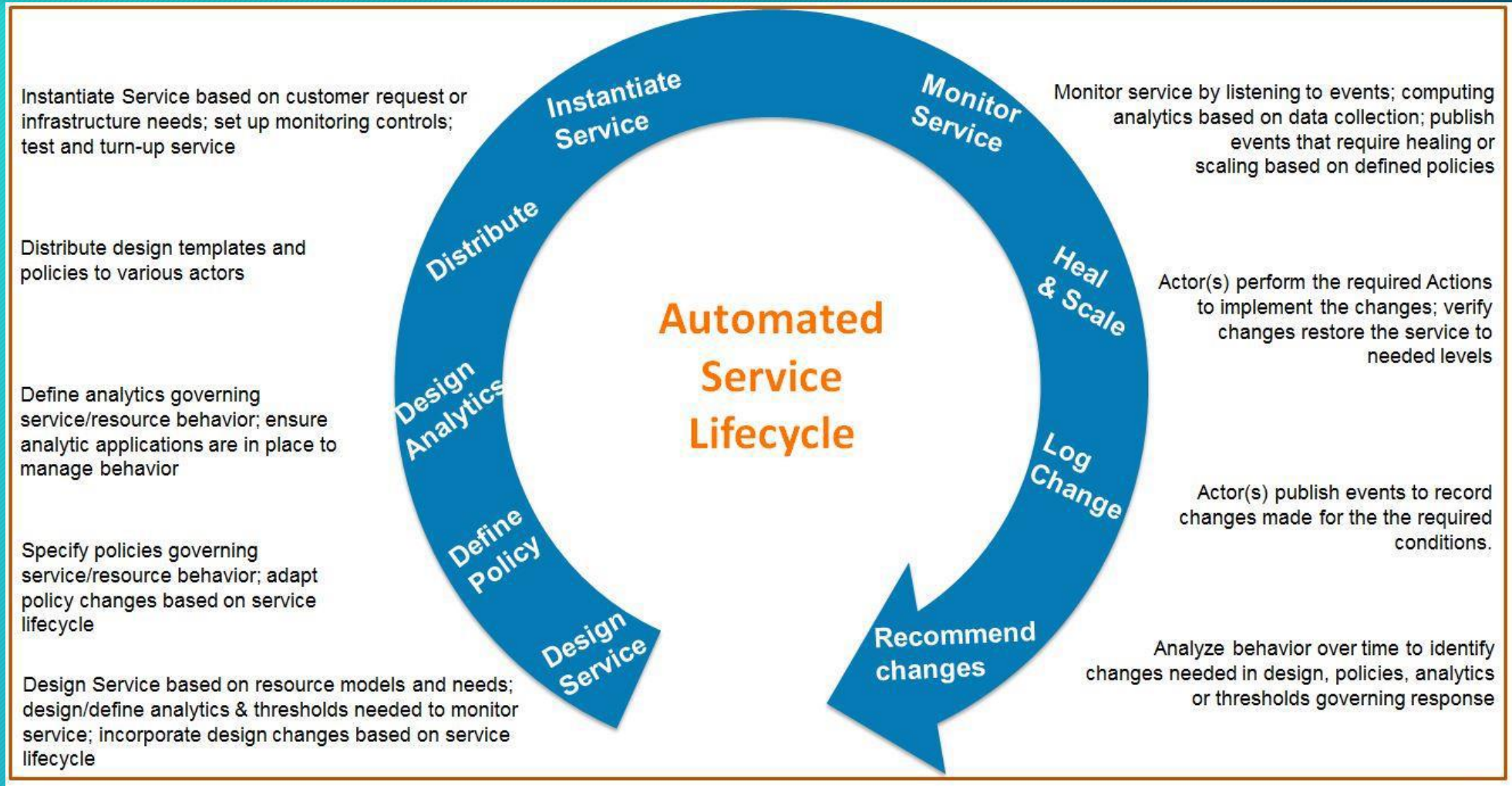

Instantiate Use Case

1. Customer Order translated to Service Request
2. Use constraints to optimally place service components
3. Create Networks
4. Create VMs with Images
5. Configure the VNFs
6. Update Inventory
7. Test the VNFs
8. Enable Closed Loop policies

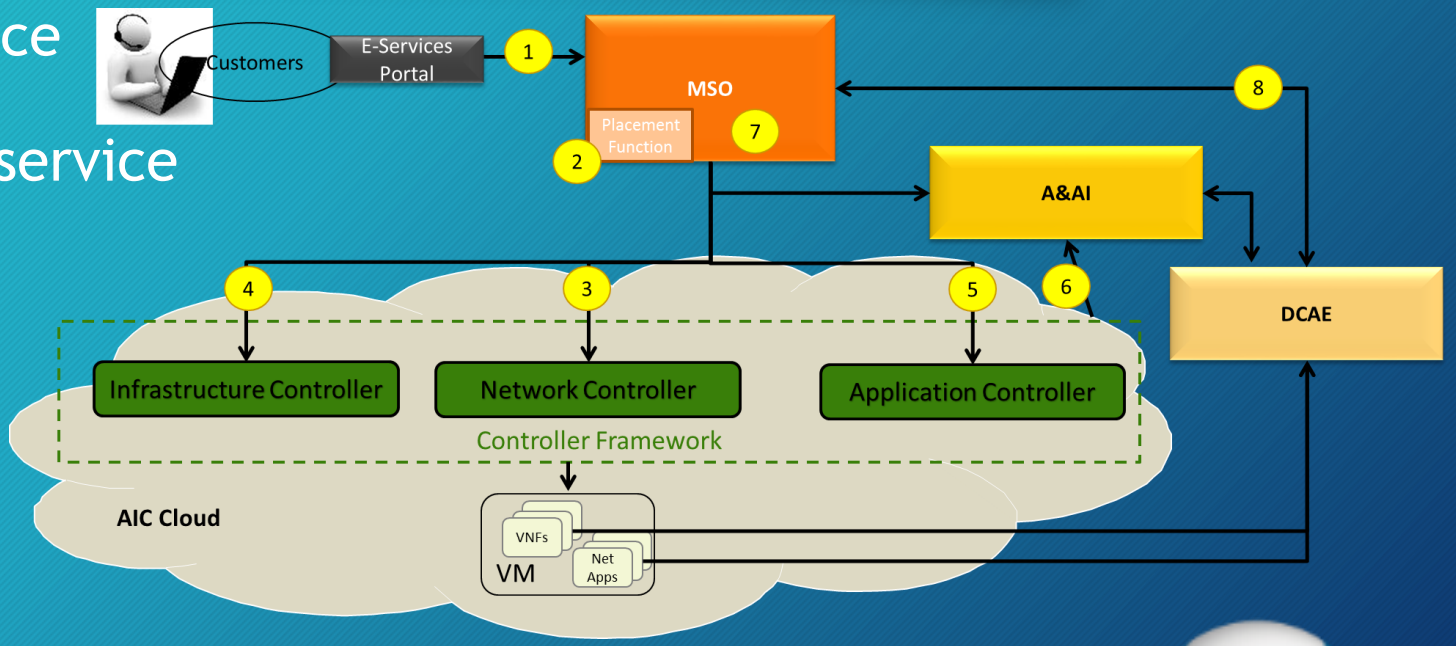

Policy Driven

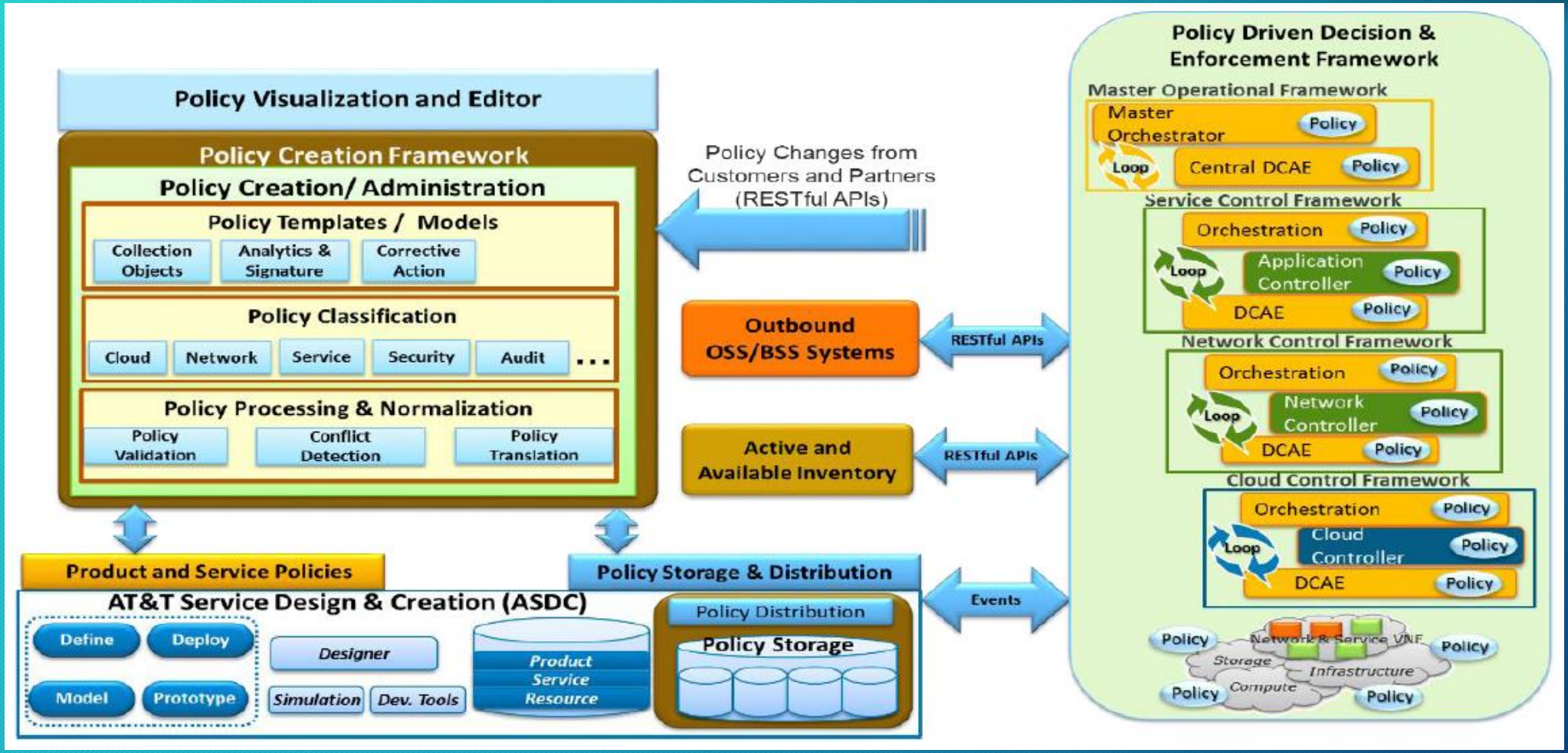

Analytic Framework

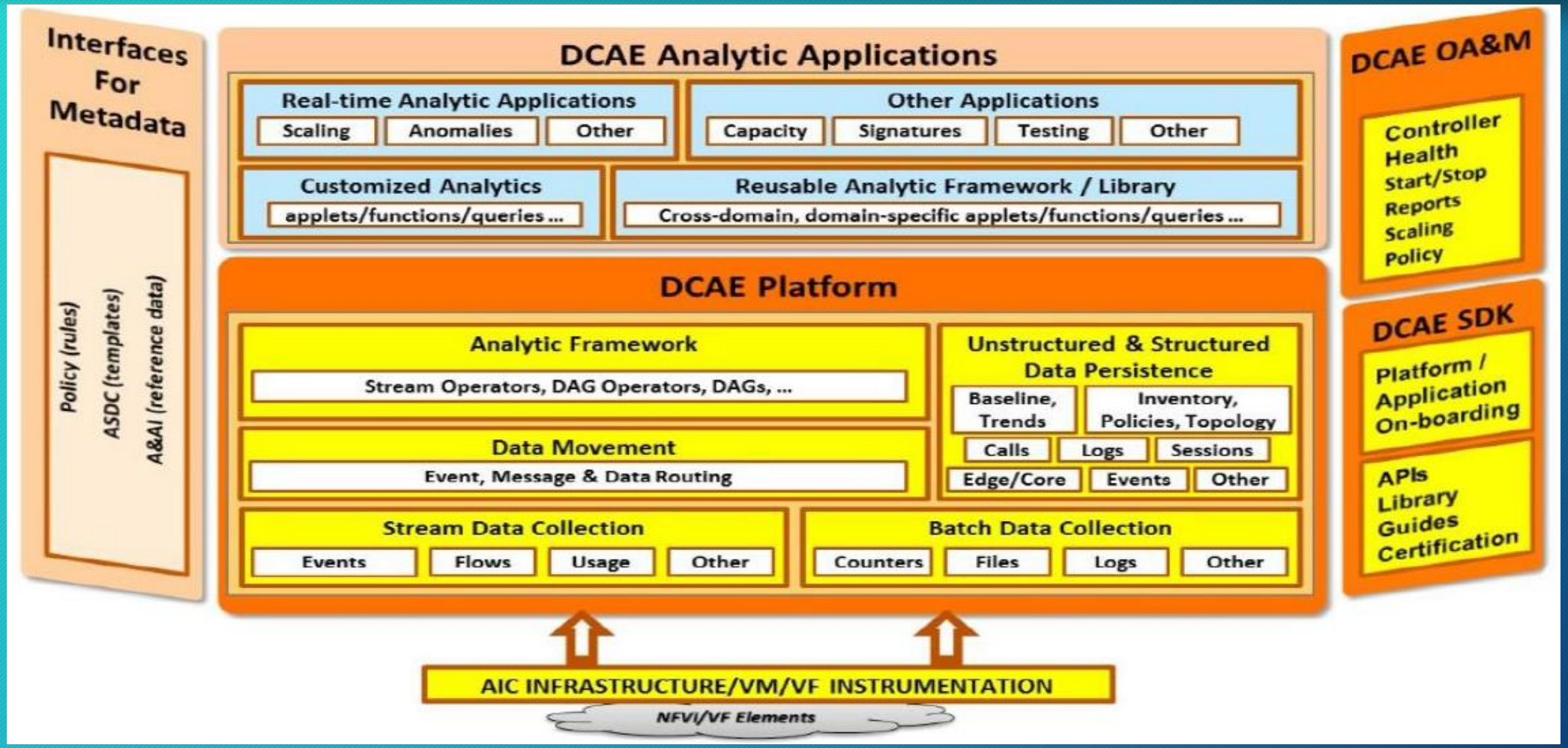

Inventory

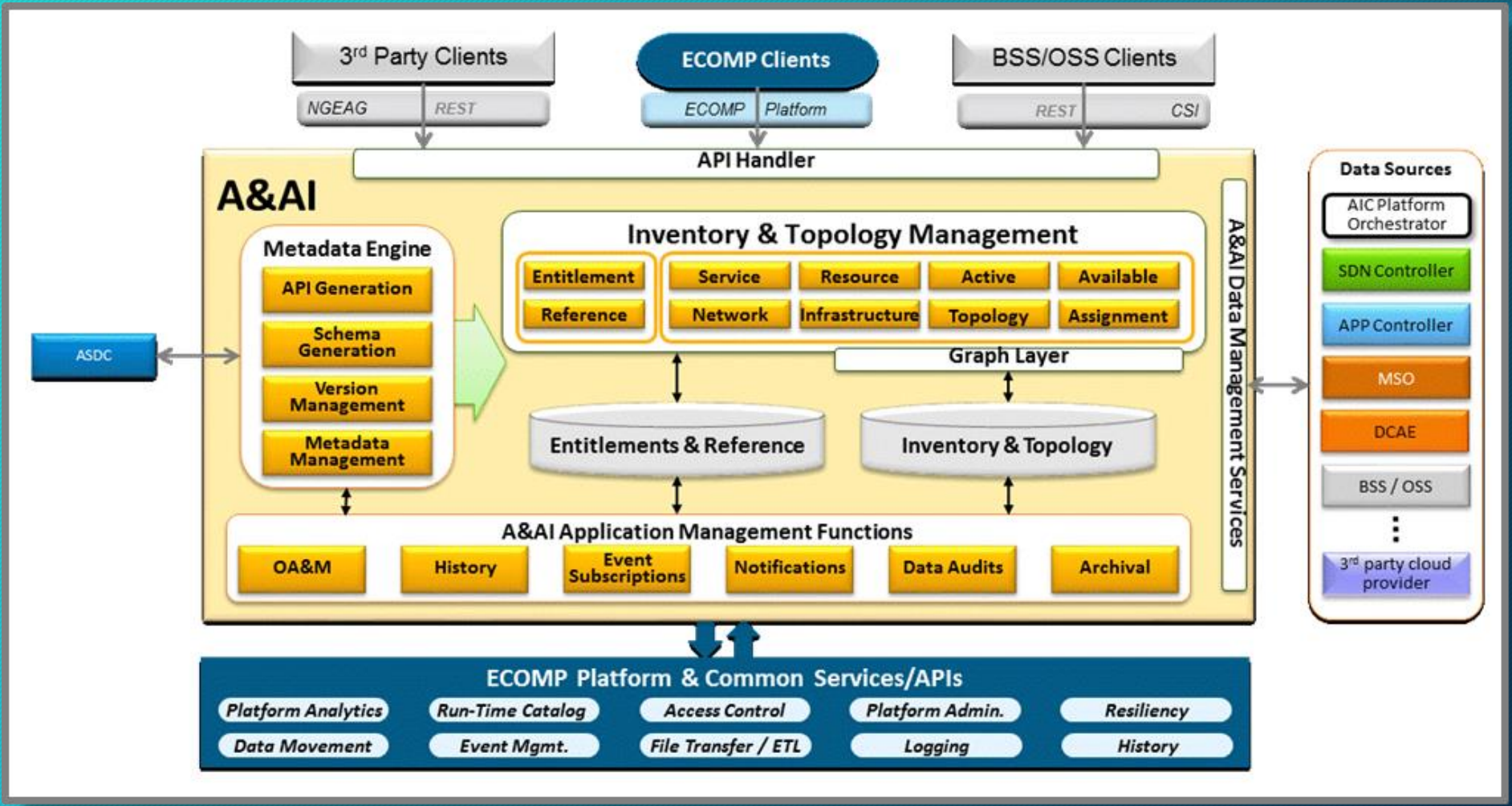
3rd Party Clients
NGEAG
REST
ECOMP Clients
ECOMP
Platform
BSS/OSS Clients
REST
CSI
API Handler
A&AI
Metadata Engine
API Generation
Schema Generation
Version Management
Metadata Management
Inventory & Topology Management
Entitlement
Reference
Service
Network
Resource
Infrastructure
Active
Topology
Available
Assignment
Graph Layer
Entitlements & Reference
Inventory & Topology
A&AI Application Management Functions
OA&M
History
Event Subscriptions
Notifications
Data Audits
Archival
A&AI Data Management Services
ASDC
Data Sources
AIC Platform Orchestrator
SDN Controller
APP Controller
MSO
DCAE
BSS / OSS
3rd party cloud provider
ECOMP Platform & Common Services/APIs
Platform Analytics
Run-Time Catalog
Access Control
Platform Admin.
Resiliency
Data Movement
Event Mgmt.
File Transfer / ETL
Logging
History

Overall ECOMP Platform Decomposition

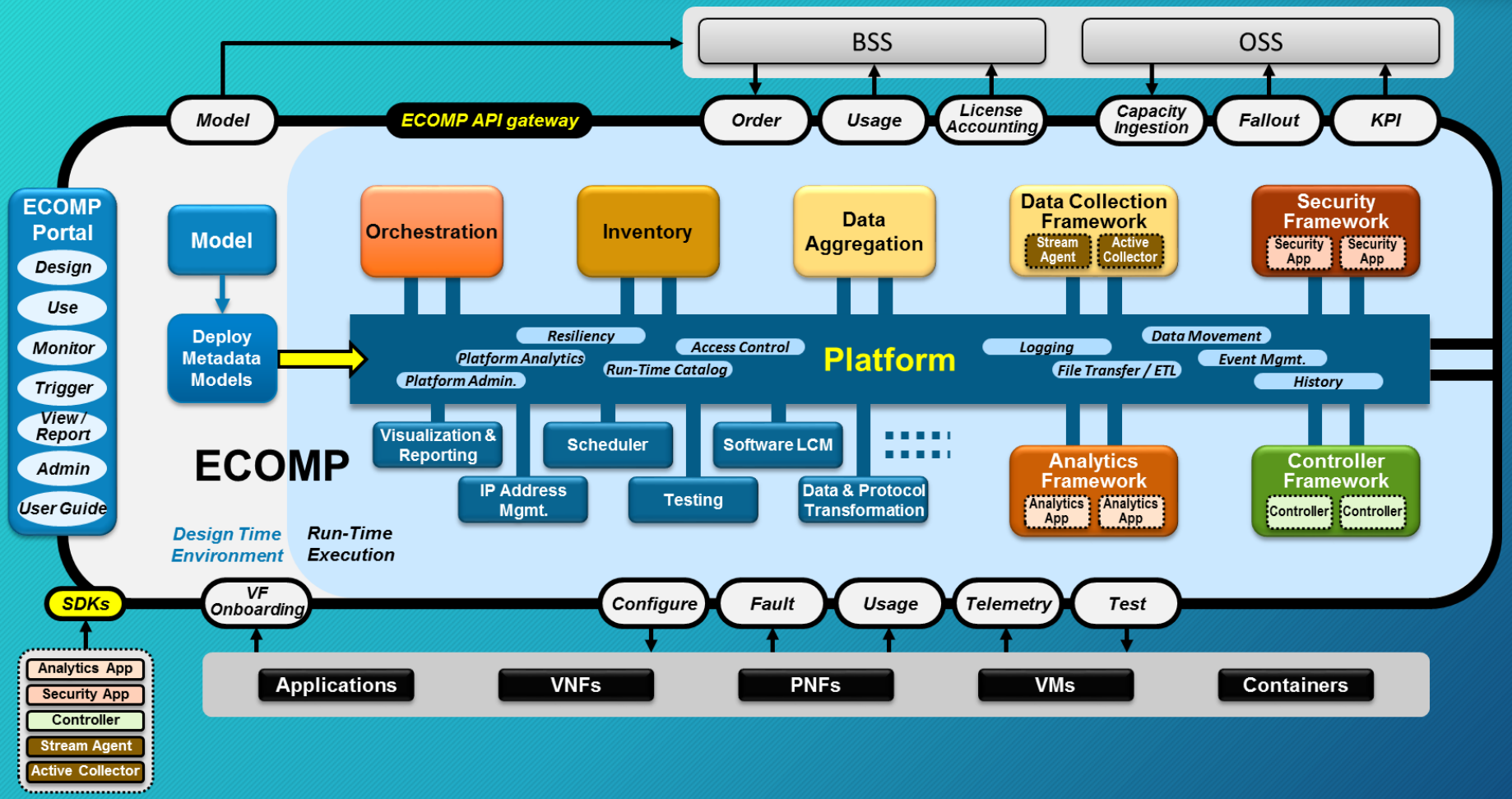

As a platform, ECOMP is a single logical unit that is contains of number of loosely coupled internal components that collaborate consistently via APIs. The behavior of the platform and its APIs are administered through a shared model (metadata instructions and policies).

Conclusion

- Complete ECOMP White Paper can be downloaded at
  - att.com/ecomp
  - http://about.att.com/innovation/labs
- To provide technical feedback on the whitepaper, or express interest in driving this initiative forward, write us at
  - ecomp-feedback@research.att.com